JET FLOW

JT SERIES
CONSTRUCTION

Triplex plunger pump, available in 6 versions.
Pressure packing design with integrated cooling system.
Orthogonally fitted valves.
Splash lubrication.
Flushing systems available on request on selected versions.

JT SERIES

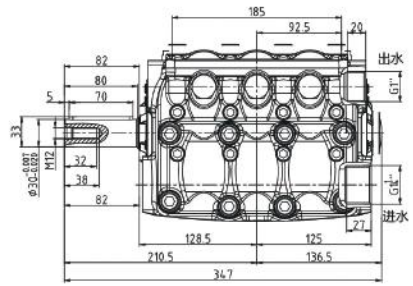

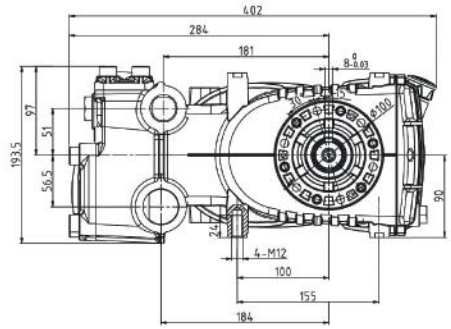

Tipo pompa Pump type	Portata Volume		Pressione Pressure			g/min	Potenza Power		Peso Weight	Dimensions
	l/min	US Gpm	bar	Mpa	p.s.i.	r.p.m	hp	kW	kg	mm
JT16	27	7.2	500	50	7250	1750	36	26.6	44	402×347×194
JT18	29	7.6	500	50	7250	1450	37	27.5	44	402×347×194
	35	9.2	400	40	5800	1750	36	26.6	44	
JT20	36	9.4	400	40	5800	1450	37	27.5	44	402×347×194
	43	11.3	320	32	4640	1750	36	26.6	44	
JT22	43	11.4	320	32	4640	1450	36	26.6	44	402×347×194
	52	13.7	250	25	3625	1750	34	24.8	44	

Tipo pompa Pump type	Portata Volume		Pressione Pressure			g/min	Potenza Power		Peso Weight	Dimensions
	l/min	US Gpm	bar	Mpa	p.s.i.	r.p.m	hp	kW	kg	mm
JT24	51	13.5	250	25	3625	1450	33	24.3	44	402×347×194
	62	16.3	200	20	2900	1750	32	23.6	44	
JT28	70	18.4	200	20	2900	1450	36	26.6	44	402×347×194
	84	22.2	175	17.5	2538	1750	38	28.0	44	
JT30	80	21.1	175	17.5	2538	1450	36	26.6	44	402×347×194
	96	25.5	140	14	2030	1750	35	26.0	44	
JT32	91	24.0	150	15	2175	1450	35	26	44	402×347×194
JT36	115	30.4	120	12	1740	1450	36	26.6	44	402×347×194
	139	36.7	100	10	1450	1750	36	26.6	44	
JT40	142	37.5	100	10	1450	1450	37	27.1	44	402×347×194